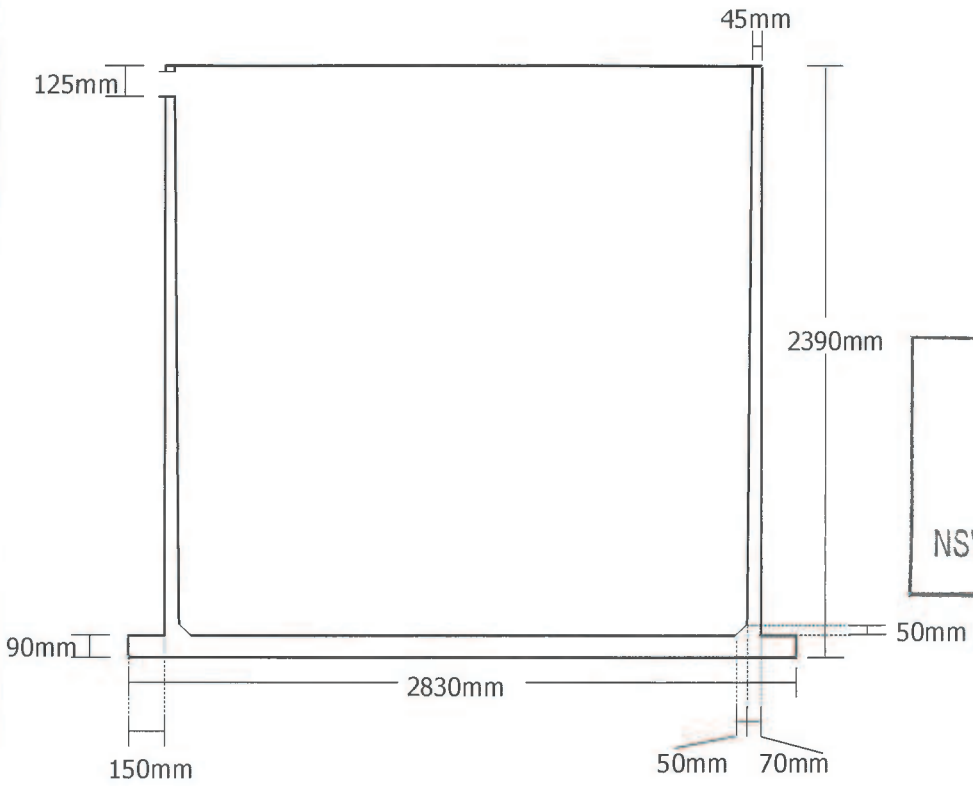

APPROVED
15 SEP 2015
NSW MINISTRY OF HEALTH

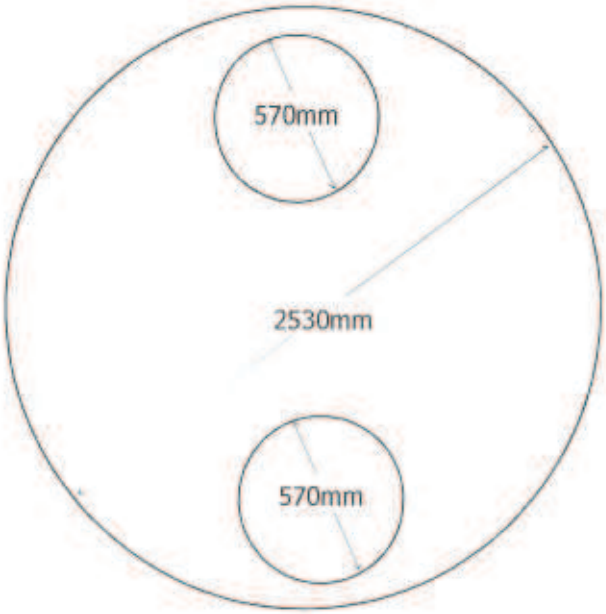

Cylindrical vertical axis collection well with integrated self anchoring collar.

Manufactured by casting & vibrating S38 fibre steel reinforced concrete with extra F72 reinforcing mesh in base of tank.

Lids are cast with 40mpa concrete with F82 steel reinforcing mesh.

Lifting pins 600mm below top of tank.

80mm thick lid	1 x F82 steel reinforcing mesh

1. All Collection Wells are manufactured to comply with Australian Standards AS/NZS 1546.1 :2008.

10,000 litre COLLECTION WELL

COLLECTION WELLS manufactured by Highland Tanks Pty Ltd. PO Box 1158, MITTAGONG NSW 2575 Factory: 16 Gantry Place, BRAEMAR Phone: 02 4889 8288 Fax: 02 4889 8566	Highland Tanks Pty. Ltd. ACN 090 907 725 trading as **Highland Concrete Tanks** PO Box 1158, MITTAGONG NSW 2575 Phone: 02 4889 8562 Fax: 02 4889 8566	Drawing No. **HCT43D 51** **Revision 1** **6/09/2015**
Designed: D.W. Rebbeck		Date: 11/11/09